MILOAD

Less strain. More gain.

Move Italy Lifting Optimized Assistance Devices

www.move-italy.com

MILOAD MF450
BROCHURE

THE TRANSFORMABLE CRANE

Designed to Adapt. Built to Perform.

MILOAD

Less strain. More gain.

Move
Italy
Lifting
Optimized
Assistance
Devices

MF 4500

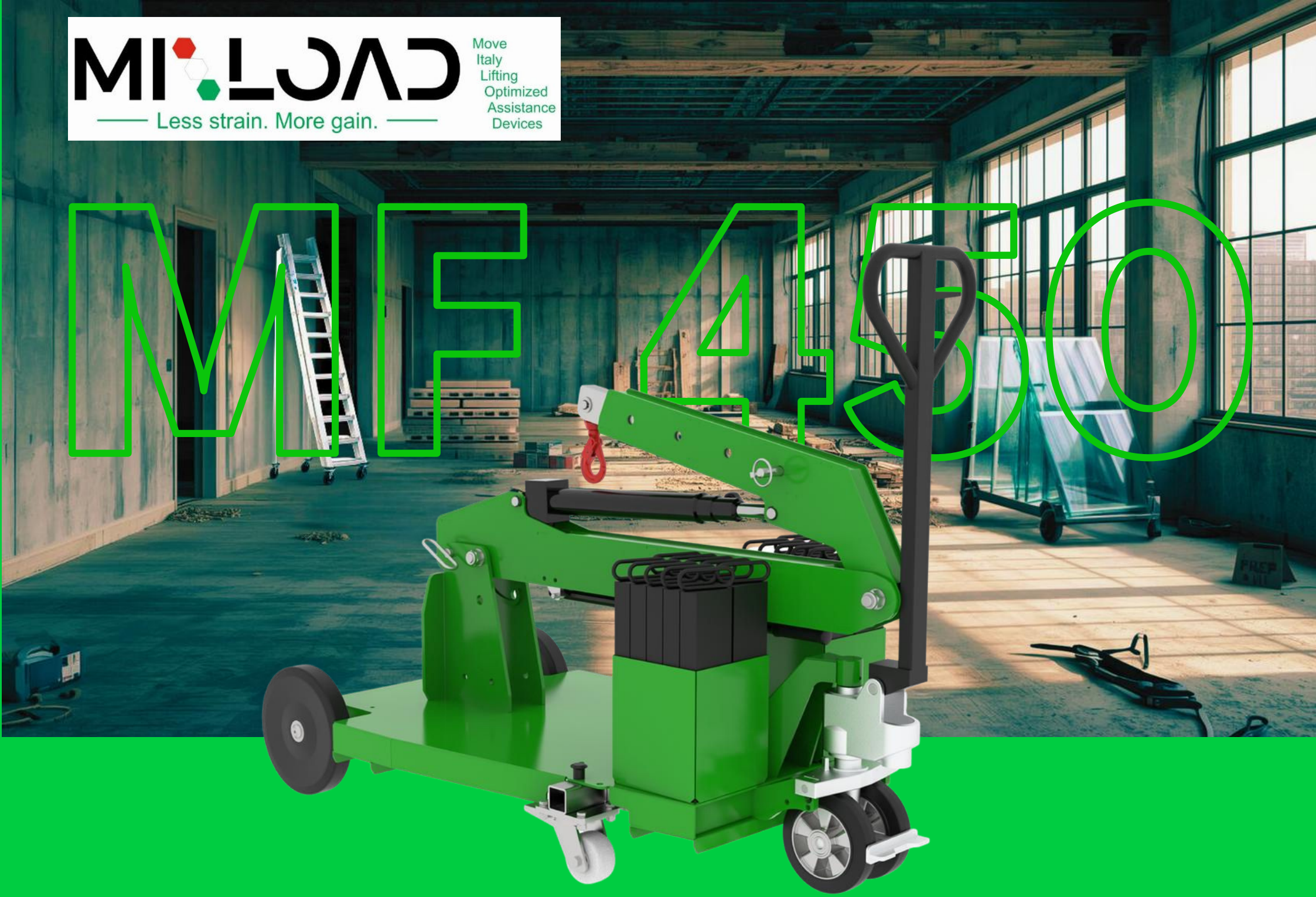

The MILOAD MF450 is a wheeled counterbalanced crane that adapts to an unlimited number of applications in various industrial sectors, ensuring incredible ease of movement as well as an incredible ability to operate in confined spaces and uneven ground.

It is a crane that can be configured with 4 types of wheels (pneumatic, solid rubber, nylon, superelastic) depending on the floors on which it must operate.

One of the key features is the ability to perform precise and fast lifts, even in complex situations, and to speed up the construction and installation processes, significantly improving work efficiency.

**Thanks to its foldable column,
removable small size counterweights (10 kg each)
and compactness (just 780 mm wide),
it can be transported on any commercial vehicles and
moved with any type of forklift and/or
construction site lifting equipment,
reducing downtime in the field.**

The weight without counterweights is only 220 kg

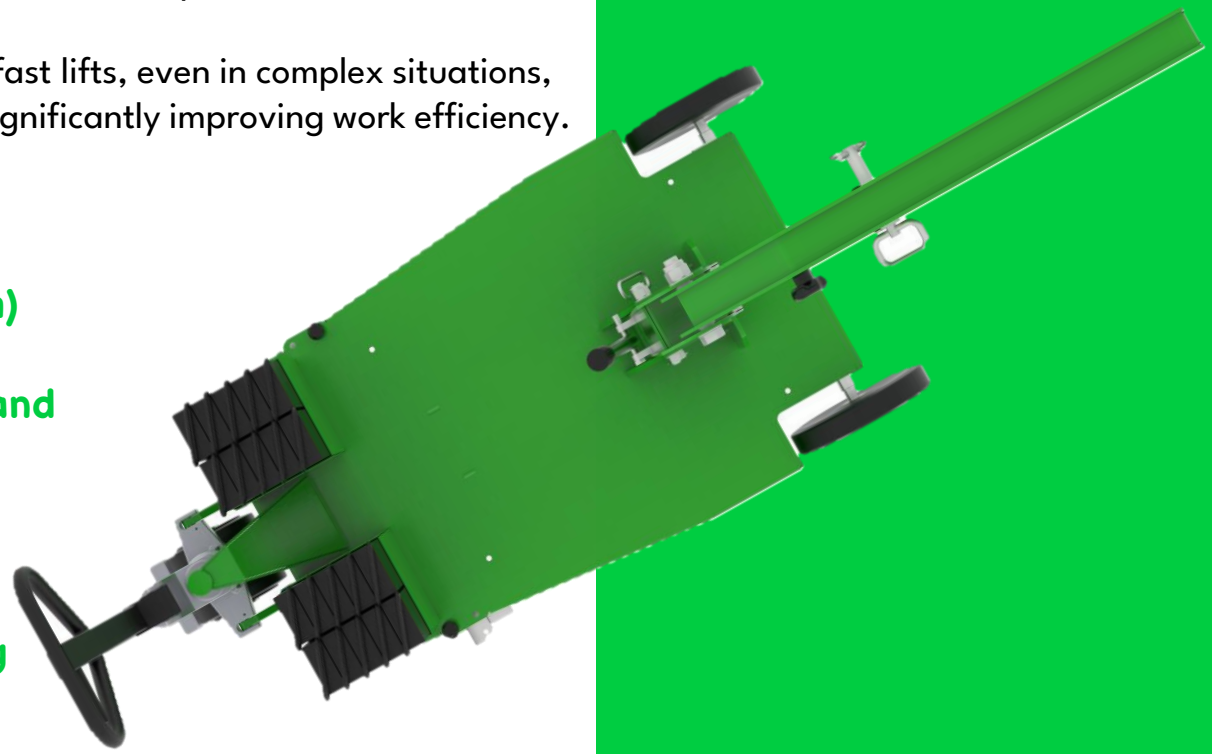

The MILOAD MF450 is typically used to lift, move, and assemble materials of various sizes and weights on construction sites, such as ceramic slabs, glass, concrete blocks, assembly equipment, and prefabricated panels.
Another common use is for infrastructure maintenance
in residential and industrial buildings.

It is the ideal solution for renovations in existing buildings, where floor access and maneuvering space are critical.
It can also be used on uneven terrain thanks to the adjustable levelers in places that are difficult to reach with other lifting equipment.

MILOAD
MF450

LOAD CHART

WITH COUNTERWEIGHTS

STANDARD ARM

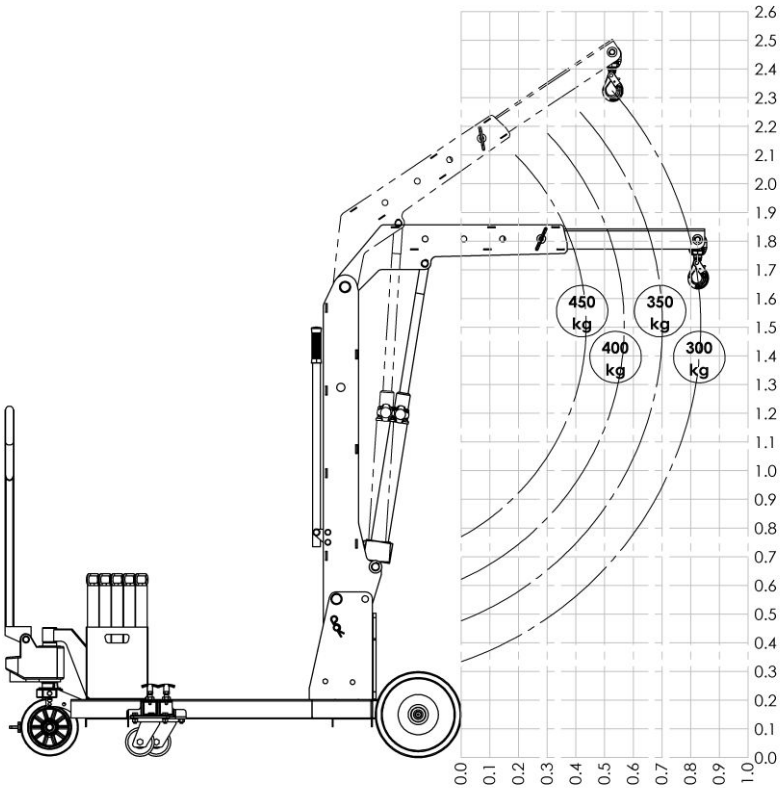

WITH OPTIONAL EXTENSION

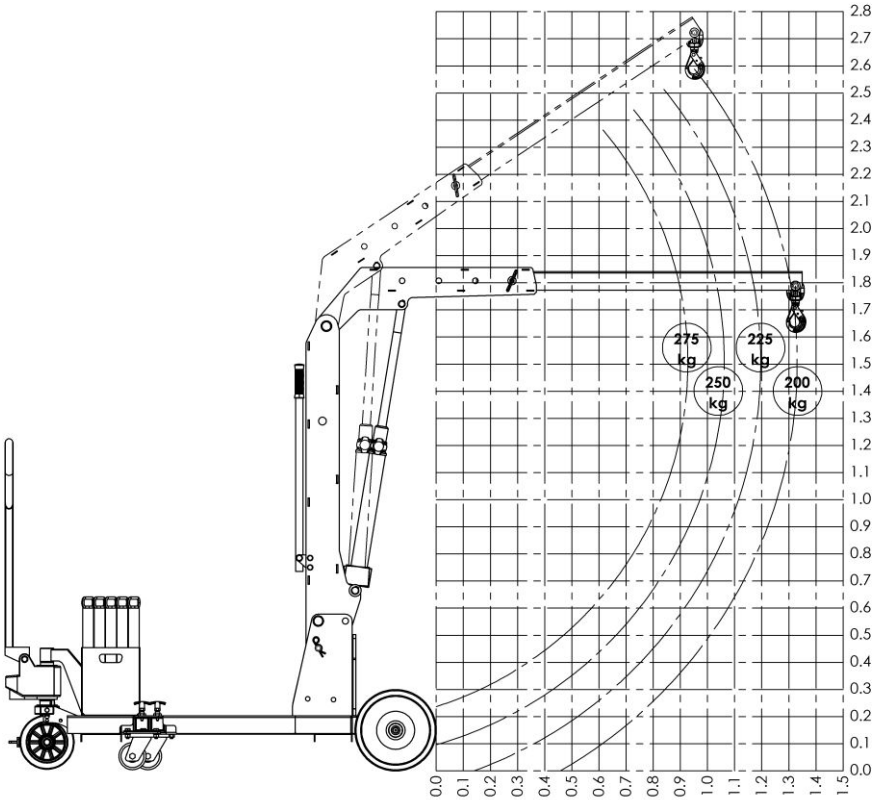

THE TRANSFORMABLE CRANE

LOAD CHART

WITHOUT COUNTERWEIGHTS

STANDARD ARM

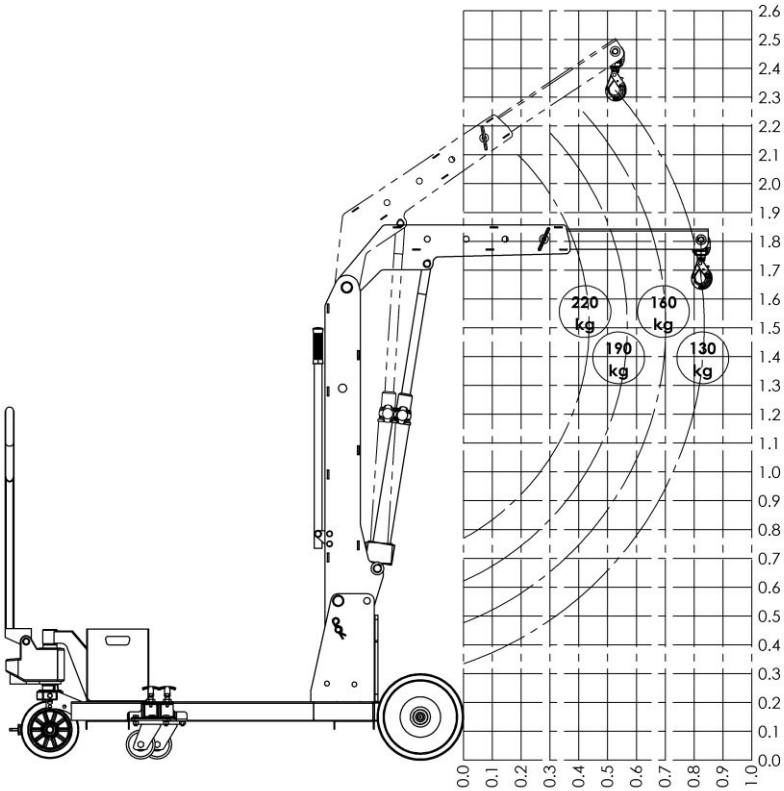

WITH OPTIONAL EXTENSION

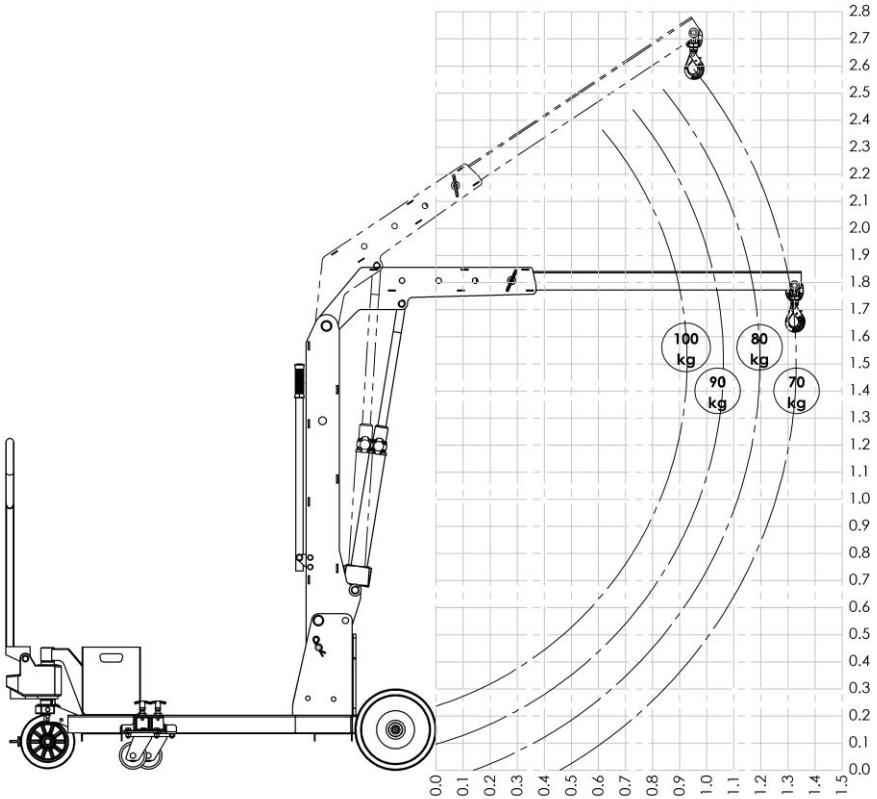

THE TRANSFORMABLE CRANE

DRAWINGS

780 mm wide – 1590 mm long

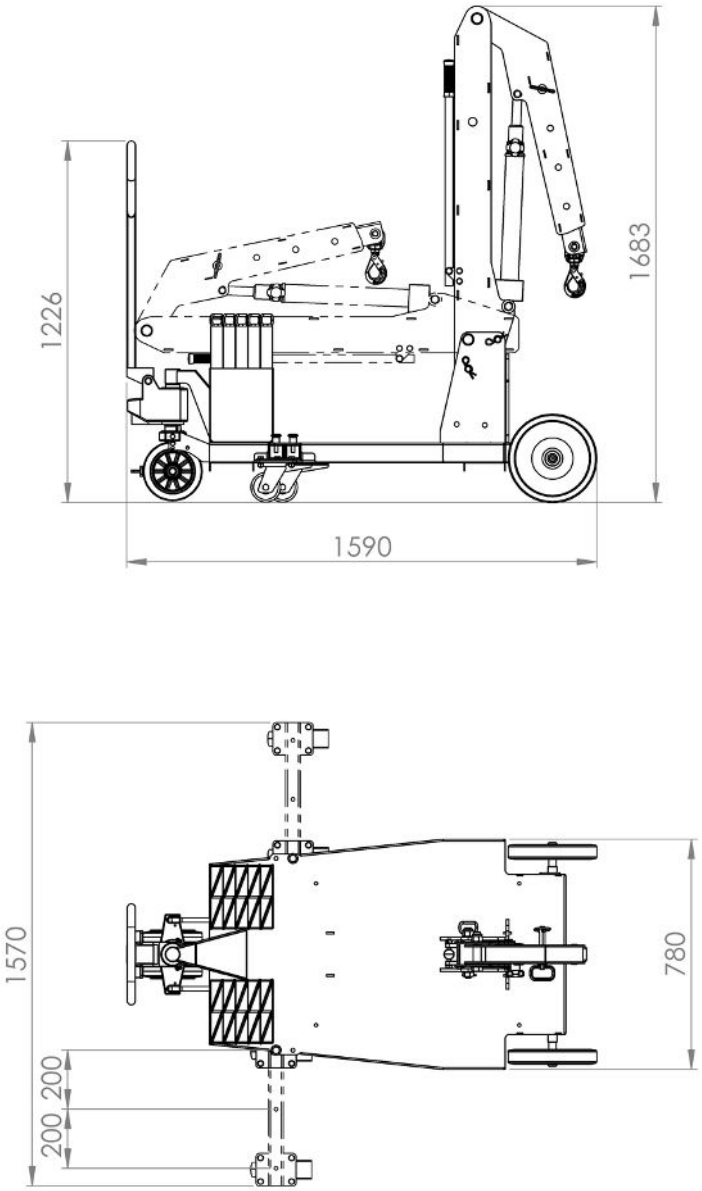

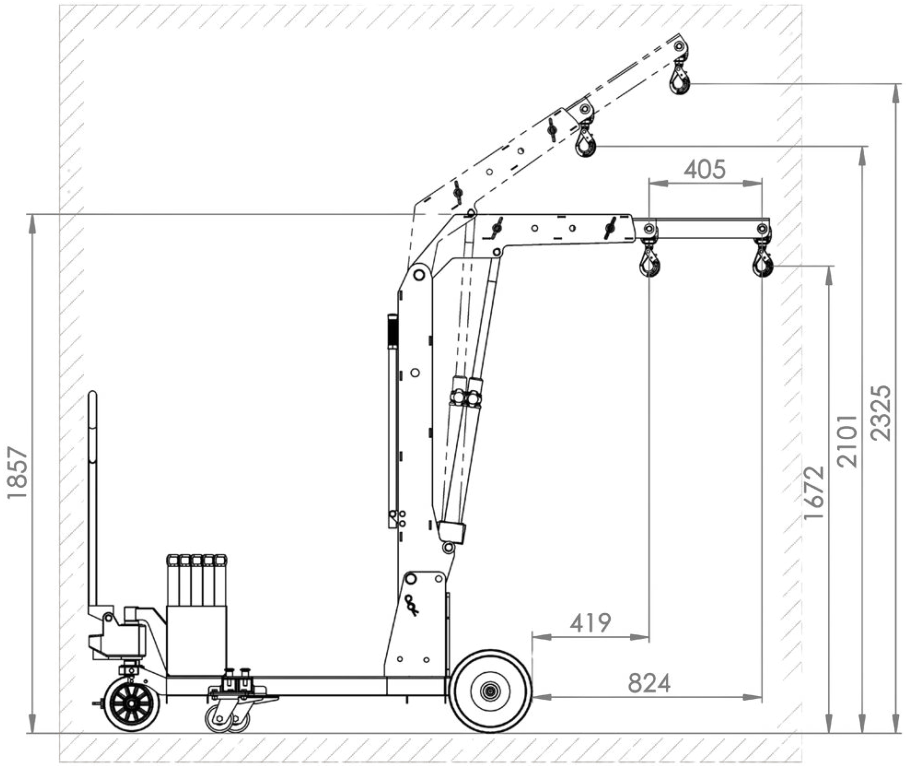

THE TRANSFORMABLE CRANE

MAIN FEATURES

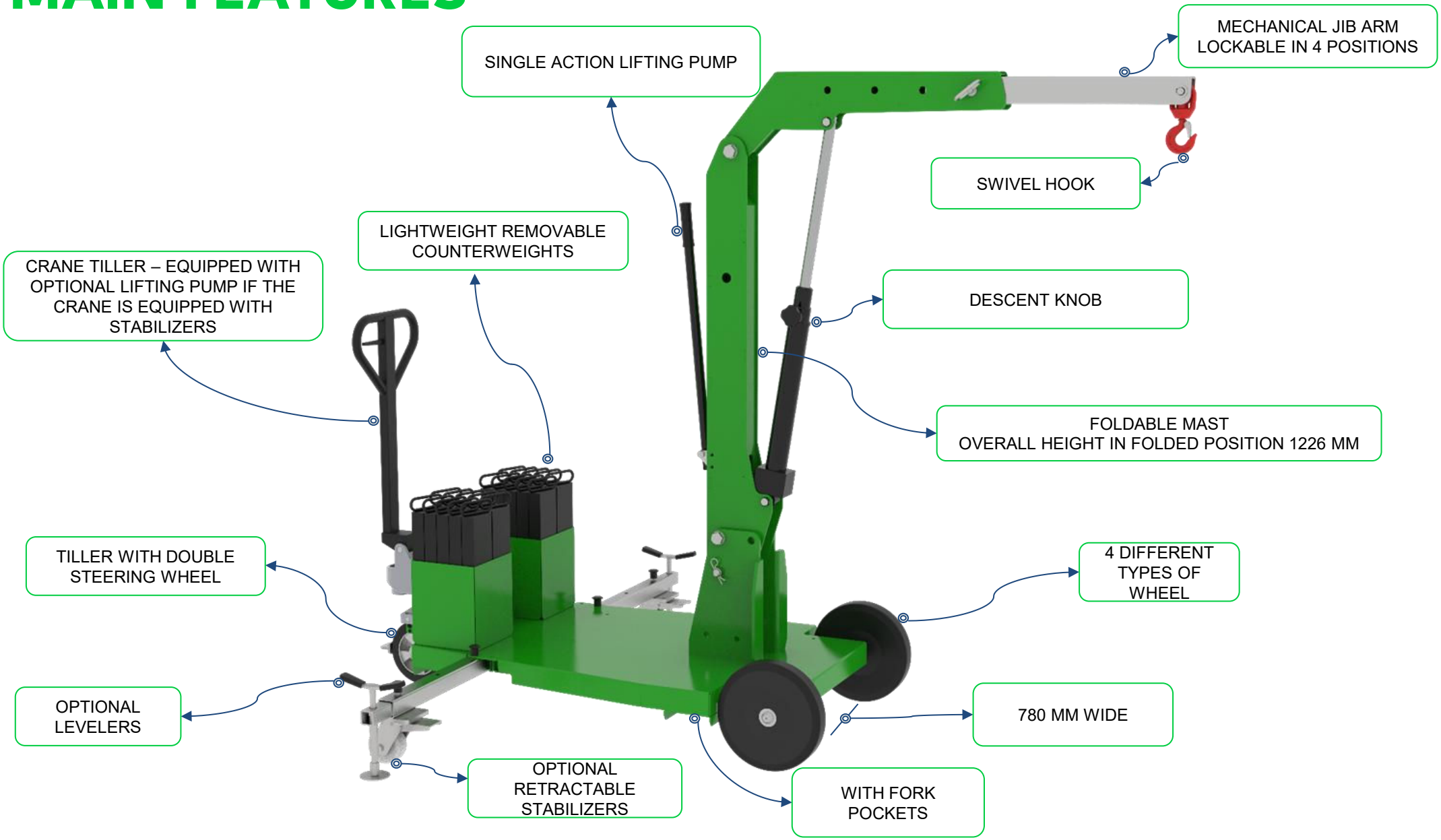

Some examples of material that can be lifted with MILOAD in the construction industry:

:

- Structural components: columns, pillars, floors, roofs, roofing, plasterboard panels, and photovoltaic panels.
- Building materials: bricks, bagged cement, wooden, metal, or concrete beams, flooring, doors, and windows.
- Equipment: boilers, air conditioners, generators, storage batteries.
- Work tools: construction machinery, toolboxes, compressors.

In general, the MILOAD MF450 is the ideal tool for lifting and transporting all types of loads that cannot be lifted manually due to their weight and size.

Other industries where MILOAD is used

- Public entities that require small, easily transportable cranes for infrastructure maintenance (bridges, viaducts, tunnels, aqueducts), public parks, and maintenance of street furniture and monuments.

- Oil & Gas industries that require extremely reliable lifting equipment to withstand harsh working conditions in the construction and installation of pipelines and oil and gas stations, and to carry out maintenance work.

4 types of wheels available and interchangeable for any flooring

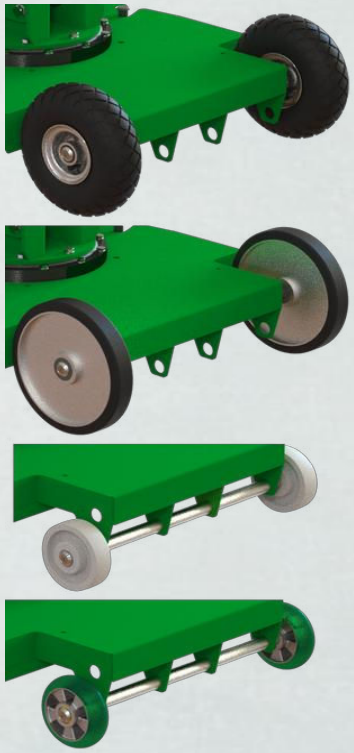

2 types of pumps available for raising and lowering the arm

It's overall height of 1226 mm in folded position make it possible to transport the crane on any commercial vehicle.

Optional stabilizers and levelers with tiller equipped with hand pump

MAIN APPLICATIONS

MILOAD
Less strain. More gain.
Move Italy Lifting Optimized Assistance Devices

THE PERFECT CRANE FOR CONSTRUTION SITES

Our cranes are used on construction sites for handling ceramic slabs, panels, and loose materials. They can be transported on freight elevators thanks to their compact size and removable ballast. They can operate on uneven floors thanks to optional levelers.

THE MOST EFFICIENT SOLUTION FOR INSTALLING GLASS PANELS

Cranes with removable ballasts and stabilizers are the most flexible and safe solution for installing glass panels, window frames, heat pumps, and storage batteries.
They are chosen by companies operating in the renovation and architecture of civil and industrial buildings.

AN EFFECTIVE SOLUTION FOR REPAIR AND MAINTENANCE TASKS

Compact counterbalanced cranes are an essential tool for maintaining civil and industrial facilities. The foldable mast allows them to be transported on commercial vehicles. The the tight turning angle facilitates lifting and positioning loads in tight spaces.

A SAFE LIFTING SOLUTION FOR PUBLIC INFRASTRUCTURE MAINTENANCE

Our cranes have been chosen by local and public authorities that require small, easily transportable cranes for the maintenance of infrastructure (bridges, viaducts, tunnels, aqueducts), public parks, street furniture, and monuments.

ASSEMBLY OF LARGE COMPONENTS IN THE AERONAUTICAL, RAILWAY AND SHIPBUILDING SECTORS

MILOAD is the most flexible tool for assembling mechanical parts, frames, engines, and casings in industries that manufacture aircraft, trains, and ships. It can enter tunnels and passages with obstacles to overcome in order to be positioned close to loading areas.

MADE IN ITALY

MILOAD: THE UNIVERSAL AND TRANSFORMABLE PICK & CARRY CRANE

The uses of MILOAD are unlimited. It is a mini crane that requires no installation and prevents musculoskeletal disorders. It is a sustainable crane with zero environmental impact. Compliant with current operator safety regulations. Reliable, universal, and made in Italy.

MILOAD

Less strain. More gain.

Move Italy Lifting Optimized Assistance Devices

MILOAD is a brand of Move Italy S.r.l.,
a young and dynamic company born from a passion for innovation and **Made in Italy** quality.
Our mission is simple:
to distribute worldwide high-end products that represent
the best technology in industrial handling and manipulation.

With a team of highly qualified experts,
we offer **a comprehensive consulting, sales, and after-sales service every day.**

Move Italy is a reliable partner that will help you choose the product best suited to your needs and will guarantee ongoing support over time.

Move Italy Srl:
Italian excellence at the service of your business.

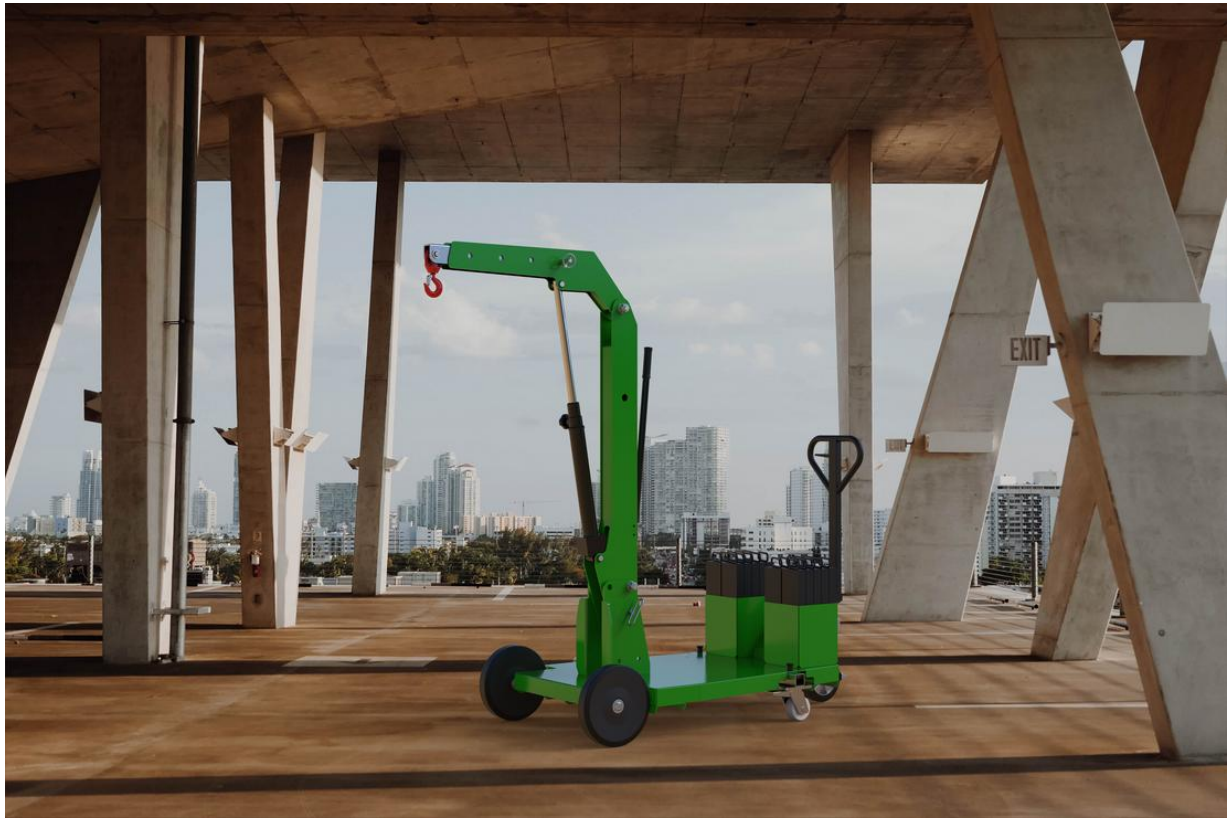

MOVE ITALY

Move Italy S.r.l.
Via Lombardia 20 - 36015 Schio (VI) Italy
info@move-Italy.com – www.move-Italy.com
tel:+3904451810847